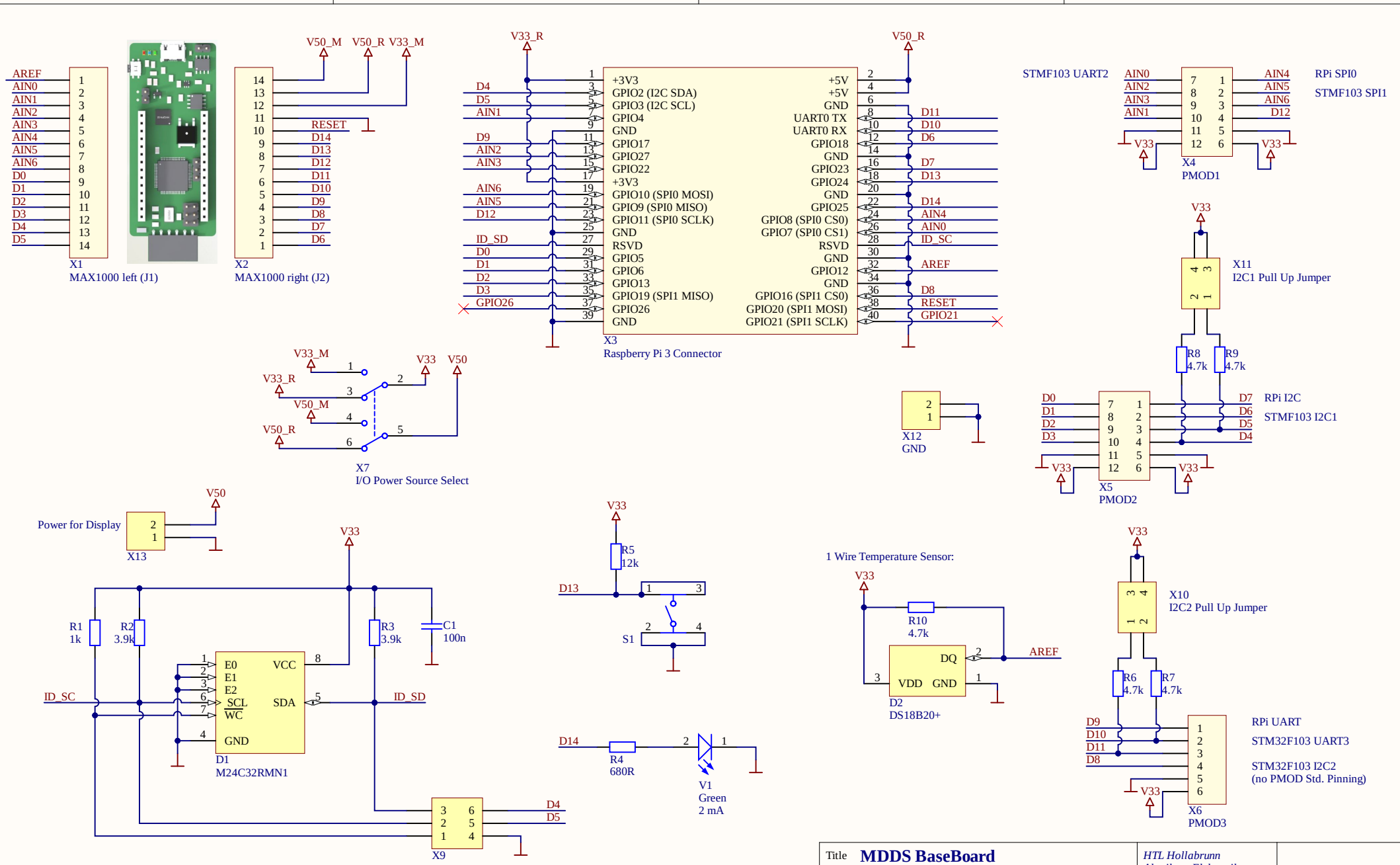

Title	**MDDS BaseBoard**		*HTL Hollabrunn*
Size: A4	Number:	Revision: 5	*Abteilung Elektronik*
Date: 07.06.2020	Time: 19:10:32	Sheet 1 of 1	*Anton Ehrenfried-Straße 10*
File: BaseBoard.SchDoc		Drawn By: Michael Wihsböck	*2020 Hollabrunn*